Iskra ERO IE-DG7000

1

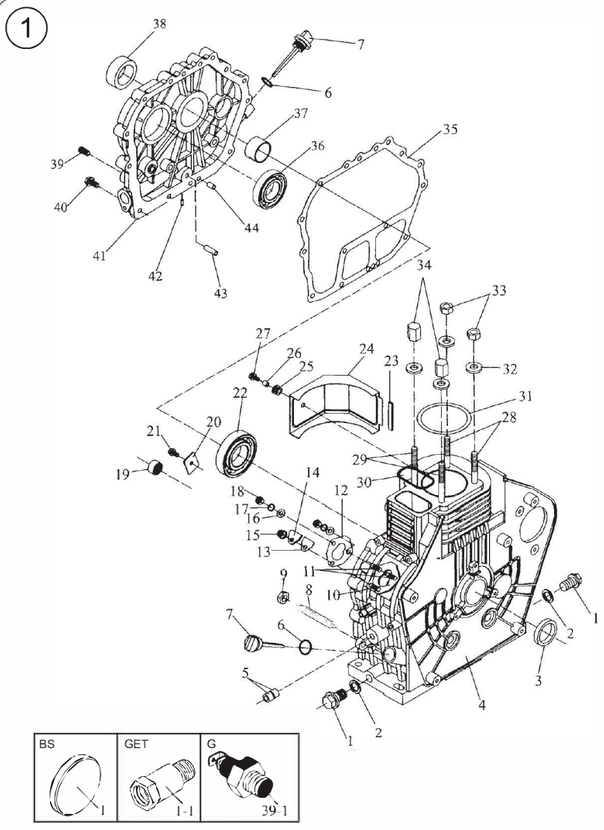

(1) Cylinder block assembly 10101000

Serial number	Part number	Name	Quantity
1	13101001	Drain plug	2
1-1	11801001	Drain plug connecting plug	2
2	13101002	Drain plug sael assembly	1
3	13101003	Oil seal SG35X50X8(rear)	1
4	10101001	Cylinder block	1
5	10101002	Needle bearing	2
6	12101006	O-ring	2
7	12101003	Oil dipstick	2
8	13101008	Oil sensor	1
9	13101009	Nut	1
10	13101010	Fuel injection pump fastening bolt(short)	1
11	13101011	Fuel injection pump fastening bolt(long)	2
12	13101012	Fuel injection pump gasket	2
13	13101013	Seal gasket	1
14	13101014	Seal plate	1
15	30100035	Nut	3
16	30100034	Washer	2
17	30100033	Washer	2
18	30100035	Nut	2
19	13101015	Needle bearing	1
20	13101016	Thrust washer	1
21	13101017	Bolt	1
22	10101004	Ball bearing	1
23	12101004	Shock absorber strip	1
24	10101005	Air shroud	1
25	12101006	Shock absorber block	1
26	12101007	Sheath	1
27	12101001	Bolt	1
28	10101006	Cylinder head bolt (short)	2
29	10101007	Cylinder head bolt (long)	2
30	10101008	Seal ring	1
31	10101009	Cylinder head gasket	1
32	10101010	Cylinder head nut washer	4
33	10101011	Cylinder head nut (thin)	2
34	10101012	Cylinder head nut (thick)	2
35	10101013	Crank case gasket	1
36	10101016	Ball bearing	1
37	10101014	Main bearing shell	1
38	13101031	Oil seal SG35x50x8(front)	1
39	13101033	Hexagon screw	1
39-1	12301001	Low oil pressure alarm	1
40	13101032	Bolt	16
41	10101015	Crank case cover	1
42	13101035	Aluminum plug	3
43	12101018	Inlet conduit	1
44	13101036	Pin	2

2

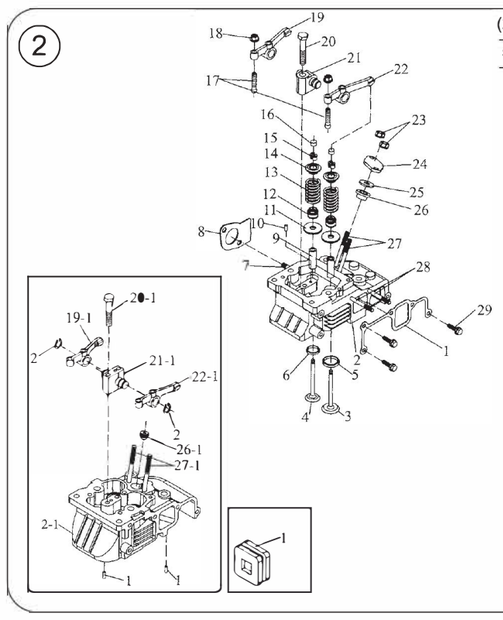

(2) Cylinder head assembly 10102000

Serial number	Part number	Name	Quantity
1	10102001	Intake pipe gasket	1
2	10102002	Cylinder head	1
2-1	11102001	Cylinder head	1
3	10102003	Intake valve	1
4	10102004	Exhaust valve	1
5	10102005	Intake seat	1
6	10102006	Exhaust seat	1
7	13102007	Bolt AM8x20	2
8	10102007	Exhaust pipe gasket	1
9	10102008	Valve pipe	2
10	13102010	Pin	1
11	10102009	Valve spring washer	2
12	10102010	Valve pipe oil seal	2
13	10102011	Valve spring	2
14	10102012	Valve spring seat	2
15	10102013	Valve collet	4
16	10102014	Valve adjusting block	2
17	10102015	Valve adjusting screw	2
18	13102018	Valve adjustment lock nut	2
19	10102016	Exhaust valve rocker arm	1
19-1	11102002	Exhaust valve rocker arm	1
20	10102017	Rocker arm blacket fastening bolt	1
20-1	11102003	Rocker arm blacket fastening bolt	1
21	10102018	The rocker blacket	1
21-1	11102004	The rocker blacket	1
22	10102019	Inlet valve rocker arm	1
22-1	11102005	Inlet valve rocker arm	1
23	30100035	Nut	2
24	13102023	Fuel injector pressing plate	1
25	13102024	Insulating sleeve washer	1
26	13102025	Insulating sleeve	1
26-1	13702006	Insulation sleeve	1
27	13102026	Bolt AM6X50	2
27-1		Bolt AM6X50	2
28	10102020	Bolt AM6X75	2
29	30100037	Bolt	3
1	11802001	Rubber plug	1
1	13102010	Pin	2
2	11102007	Check ring	2

3

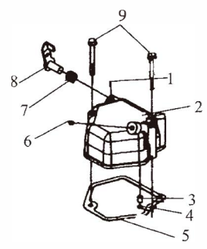

(3) Cylinder head cover assembly 10103000

Serial number	Part number	Name	Quantity
1	12103001	Steel ball	1
2	12103002	Cylinder head cover	1
3	10103001	Breather seat	1
4	13103003	O-ring 12x1.9	1
5	13103004	Cylinder head cover gasket	1
6	10103002	Aluminiun plug	1
7	13101034	Decompression part	1
8	13103006	Decompression shaft part	1
9	13103007	Bolt	2

4

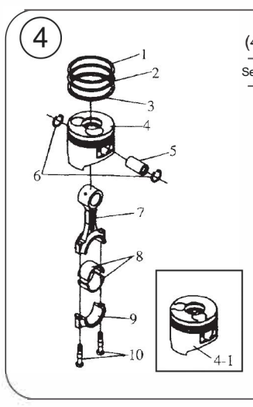

(4) Piston connecting rod assembly 10104000

Serial number	Part number	Name	Quantity
1	10104001	Top compression ring	1
2	10104002	Second compression ring	1
3	10104003	Oil ring set	1
4	10104004	Piston	1
	10604001	Piston	1
4-1	11104001	Piston	1
5	10104005	Piston pin	1
6	10104006	Retainer ring	2
7	10104007	Connecting rod	1
8	10104008	Connecting rod bearing shell	2
9	10104009	Connecting rod CAP	1
10	10104010	Connecting rod nut	2

5

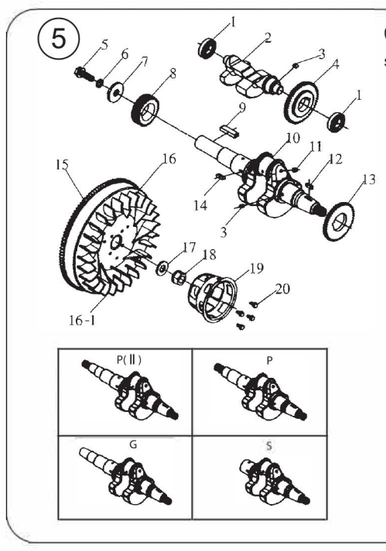

(5) Crankshaft flywheel assembly 10105000

Serial number	Part number	Name	Quantity
1	10105001	Ball bearing	2
2	10105002	Balance shaft	1
3	10105003	key	2
4	10105004	Balancing shaft timing gear	1
5	10105006	Output fastening bolt	1
6	30102032	Washer	1
7	12105004	Compaction washer	1
8	10105007	Crankshaft timing gear	1
9	12105006	Key	1
10	12105009	The crankshaft	1
	11105001	The crankshaft	1
	10305001	The crankshaft	1
	11605001	The crankshaft	1
	11705001	The crankshaft	1
	10605001	The crankshaft	1
11	13105016	Steel ball	1
12	13105010	Key	1
13	10105010	Balance shaft drive gear	1
14	10105011	Key	1
15	10105012	Flywheel ring gear	1
	10605003	Flywheel ring gear	1
16	10105013	The flywheel	1
16-1	10605002	Fan blades	1
17	10105004	Flywheel nut washer	1
18	10105015	The flywheel nut	1
19	10105016	Starting jaw chuck	1
20	13101020	Bolt	4

6

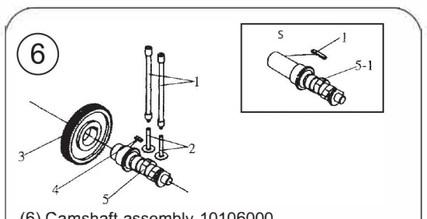

(6) Camshaft assembly 10106000

Serial number	Part number	Name	Quantity
1	10106001	Valve push rod	2
2	10106002	Valve tappet	2
3	10106003	Camshaft timing gear	1
4	13106004	Key	1
5	10106004	Camshaft	1
	11106001	Camshaft	1
S			
5-1	10606001	Camshaft	1
1	10606002	Key	1

7

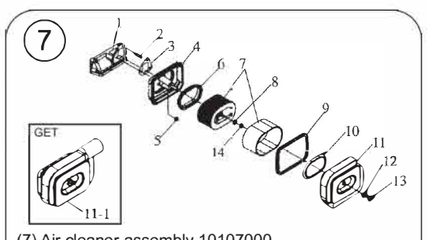

(7) Air cleaner assembly 10107000

Serial number	Part number	Name	Quantity
1	10107001	Air intake pipe	1
2	13107002	Air filter fastening bolt	3
3	10107002	Air filter fastening gasket	1
4	10107003	Air filter bottom cover part	1
5	30100035	Nut	3
6	10107004	Shockproof seal ring II	1
7	10107005	Air filter element	1
8	10107006	Shockproof part	1
9	10107007	Seal ring	1
10	10107008	Shockproof seal Ⅰ	1
11	10107009	Air filter cover	1
11-1	11807001	Air filter cover	1
12	10107010	Shockproof seal assembly	1
13	13108002	Nut	1

8

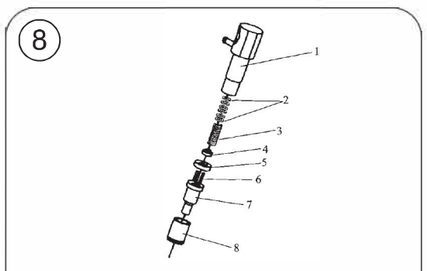

(8) Fuel injector assembly 10113000

Serial number	Part number	Name	Quantity
1	12113001	Fuel injector part	1
2	12113002	Washer	1
3	12113003	Pressure regulating spring	1
4	12113004	Mandril	1
5	12113005	Intermediate	1
6	12113006	Locating pin	2
7	12113007	Fuel injector nozzle	1
8	12113008	Fuel injector nozzle cap	1
	11113000	Fuel injector assembly	1

9

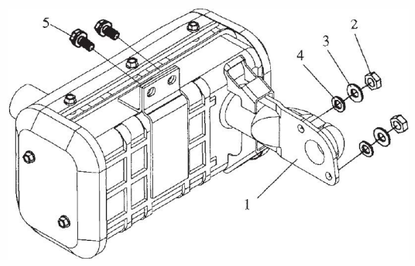

(9) Muffler assembly 10108000

Serial number	Part number	Name	Quantity
1	10108001	Muffler assembly	1
2	13108002	Nut	2
3	30100026	Spring washer	2
4	13108003	Washer	2
5	13108004	Bolt	2

10

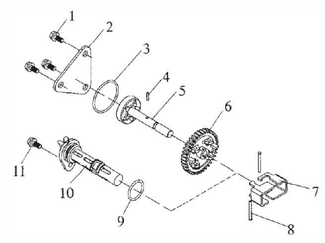

(10) Lubrication system 10109000

Serial number	Part number	Name	Quantity
1	13101020	Bolt	3
2	13109001	Oil pump cover plate	1
3	13109002	O-ring	1
4	13109003	Pin	1
5	13109005	Oil pump part	1
6	12109001	Oil pump driving gear	1
7	13111001	Fly hammer	2
8	13111002	Fly hammer pin	2
9	13109008	O-ring	1
10	12109002	Oil filter part	1
11	13108004	Bolt	1

13

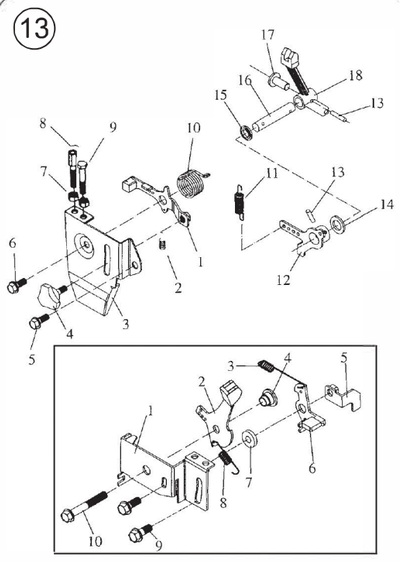

(13) Speed regulation and control system 10111000

Serial number	Part number	Name	Quantity
1	13111003	Control handle support bracket	1
2	13111004	Return spring Ⅱ	1
3	13111005	Control handle bracket	1
4	13111006	Control handle	1
5	13108004	Bolt	1
6	13111007	Bolt	1
7	13111008	Nut	2
8	13111009	Pull bolt	1
9	13111010	High speed limit screw	1
10	13111011	Return spring Ⅰ	1
11	10111001	Governing spring	1
12	10111002	Lever fork part	1
13	13111014	Pin	2
14	13111015	Lever shaft washer	2
15	13111016	Lever shaft oil seal	1
16	13111017	Lever shaft	1
17	10111003	Tappet speed regulator	1
18	10111004	Lever fork	1
	10311000		
1	10311001	Handle bracket	1
2	10311002	Control handle	1
3	12311003	Return spring Ⅰ	1
4	10311004	Pushing&pulling operation handle shaft	1
5	10311005	Pressure plate weldment	1
6	10311006	Parking handle	1
7	12311006	Bushing&pulling handle shaft washer	1
8	13111004	Return spring Ⅱ	1
9	13111020	Bolt	2
10	13111021	Bolt	1

11

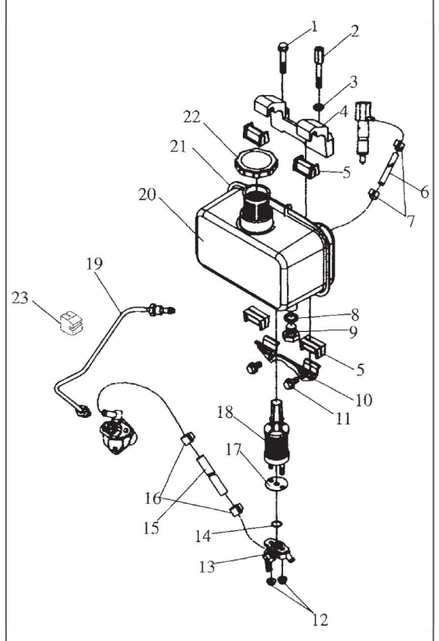

(11) Fuel system 10110000

Serial number	Part number	Name	Quantity
1	13111001	Bolt	1
2	13111002	Fuel tank upper bracket fasteningbolt	1
3	13111003	Washer	1
4	10110001	Fuel tank upper bracket	1
5	13110004	Shock absorbing pad	4
6	13110005	Oil return pipe	1
7	13110006	Oil return pipe clamp	2
8	13110007	Oil drain bolt gasket	1
9	13110008	Bolt	1
10	13110009	Fuel tank lower bracket	1
11	13108004	Bolt	2
12	30100035	Nut	2
13	13110010	Fuel tank switch body part	1
14	13110011	O-ring	1
15	13110013	Fuel pipe	1
16	13110012	Clamp	2
17	13110014	Fuel filter gasket	4
18	10110002	Fuel filter element	1
19	10110003	High pressure fuel pipe	1
20	10110004	Fuel tank	1
21	13110017	Fuel tank filter	1
22	13110018	Fuel tank cap	1
23	10111005	Shock absorbing pad	1

12

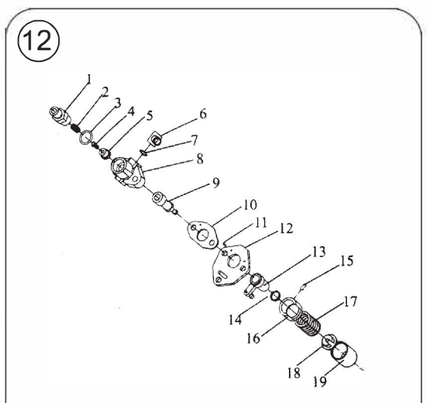

(12) Fuel injection pump assembly 10112000

Serial number	Part number	Name	Quantity
1	12112001	Delivery valve holder	1
2	12112002	Delivery valve spring	1
3	12112003	Delivery valve washer	1
4	12112004	Delivery valve core	1
5	12112005	Delivery valve seat	1
6	12112006	Tubing body weldment	1
7	12112007	O-ring	1
8	12112008	Pump body	1
9	12112009	Plunger	1
10	12112010	Washer	As needed
11	12112011	Pin	2
12	12112012	Pump body connection plate	1
13	12112013	Fuel control sleeve connection plate	1
14	12112014	Steel cable baffle ring	1
15	12112015	Pin	1
16	12112016	Supporter	2
17	12112017	Plunger spring	1
18	12112018	Spring lower seat	1
19	12112019	Tappet body	1
	10312000	Fuel injection pump assembly	1

15

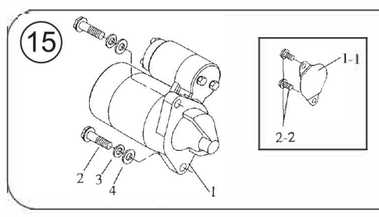

(15) Starter motor assembly 10115000

Serial number	Part number	Name	Quantity
1	10115001	Starter motor assembly	1
	10615001	Starter motor assembly	1
1-1	13115001	Cover of starting motor hole	1
2	12115001	Bolt	2
2-2	13115004	Bolt	2
3	30102032	Washer	2
4	30104005	Washer	2

14

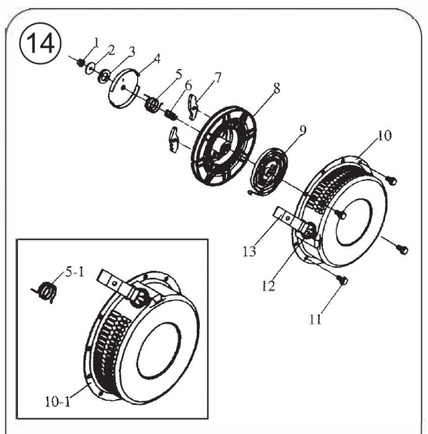

(14) Recoil starter assembly 10114000

Serial number	Part number	Name	Quantity
1	13114001	Nut	1
2	10114002	Washer	1
3	10114003	Friction plate	1
4	10114004	Starting claw pressure plate	1
5	10114005	Torsional spring	1
5-1	10614001	Torsional spring	1
6	10114006	Compression spring	1
7	10114007	Starting jaw	2
8	10114008	Starting pull plate	1
9	10114009	Plate spiral spring	1
10	10114010	Cover part	1
10-1	10614002	Cover part	1
11	13114012	Bolt	4
12	12114010	Starting rope	1
13	12114011	Starting handle	1

16

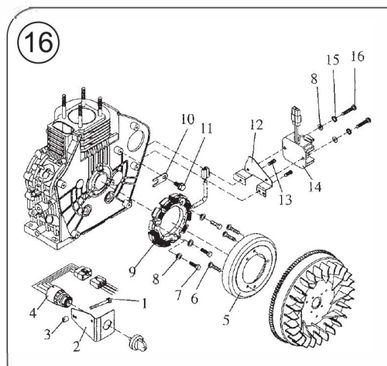

(16) Flywheel generator assembly 10116000

Serial number	Part number	Name	Quantity
1	10116001	Bolt	2
2	13116002	Electric start switch board	1
3	13116003	Long washer	2
4	13116004	Electric start switch body	1
5	13116005	Rotor part	1
6	13116006	Bolt	3
7	30101008	Bolt	3
8	30100034	Washer	5
9	13116007	Stator part	1
10	13116008	Press plate	1
11	13101020	Bolt	1
12	13116009	Governor support bracket	1
13	13116010	Bolt	2
14	13116011	Regulator	1
15	30100033	Washer	2
16	13116010	Bolt	2

17

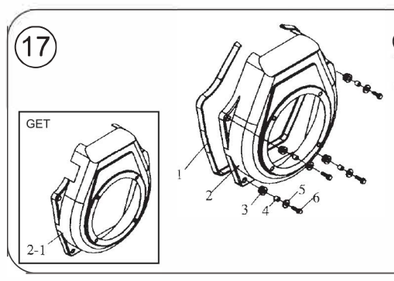

(17) Cooling device assembly 10117000

Serial number	Part number	Name	Quantity
1	10117001	Lining	1
2	10117002	Wind fan cover weldment assembly	1
	10617001	Wind fan cover weldment assembly	1
2-1	11817001	Wind fan cover weldment assembly	1
3	13117003	Shock absorbing lining	4
4	13117004	Lining	4
5	13117005	Washer	4
6	13117006	Bolt	4